L LABORATORY

P PROCESS

S SOFTWARE

A AUTOMATION

SCHMIDT HAENSCH

innovators by tradition since 1864

iPR-Series

Process-Refractometer

Your eye in the pipe!

Inline, immediate concentration monitoring directly within the process stream.

Applications

- Concentration monitoring
- Product interface detection (product recovery)
- Deviation from a nominal value (quality control)
- Crystallization / powder or crystal dissolving monitoring
- Dosage control (blending)
- Impurity detection

Inline Process Refractometers (iPR) from SCHMIDT+HAENSCH have been used successfully in a wide range of process monitoring applications for more than 35 years.

Our iPRs continuously measure the refractive index and instantly determine the concentration of dissolved solids in solution and/or the mixing proportion of binary or quasi-binary liquid mixtures.

The measurement is independent of turbidity, colour and absorption as well as viscosity.

Over 35 years of experience and optimization, we have designed technical solutions for various demanding applications and challenging process conditions. S+H IPRs perform with unmatched reliability, resolution and precision by using only highest quality components and manufacturing standards.

Technological highlights of iPR measuring heads

- Measurement in less than 1 second
- Compact units with integrated electronics in the IP69K housing (integrated or remote display optional)
- Temperature measurement within the sapphire prism ensuring the fastest and most precise temperature reading resulting in drift free temperature compensated measuring values
- Stated precisions are valid within the whole temperature range
- LED light source (589nm), extrem. long lifetime (100,000 hours) Due to the unique technology implemented, the iPR light source does not have to be exchanged or recalibrated during the entire life time of the instrument
- Measuring sensors meet the hygienic requirements of the food and pharmaceutical industries and tolerate temperatures up to 150°C***
- Temperature compensation for individual products (e.g. Brix, Oechsle, Glycol, H_2O_2)
- User configurable digital switches (1 A)
- Galvanic isolated 4 - 20 mA outputs*
- Internal desiccant bag increasing the life span of electrical and optical components
- Electronic moisture sensor within the measuring head
- Process connections with VariVent (Tuchenhagen), TriClamp, APV, or in-line housing for small volumes
- Known SCHMIDT+HAENSCH quality „Made in Germany“

* Except iPR Compact
** Models iPR FR2, iPR HR2
*** Only iPR FR2

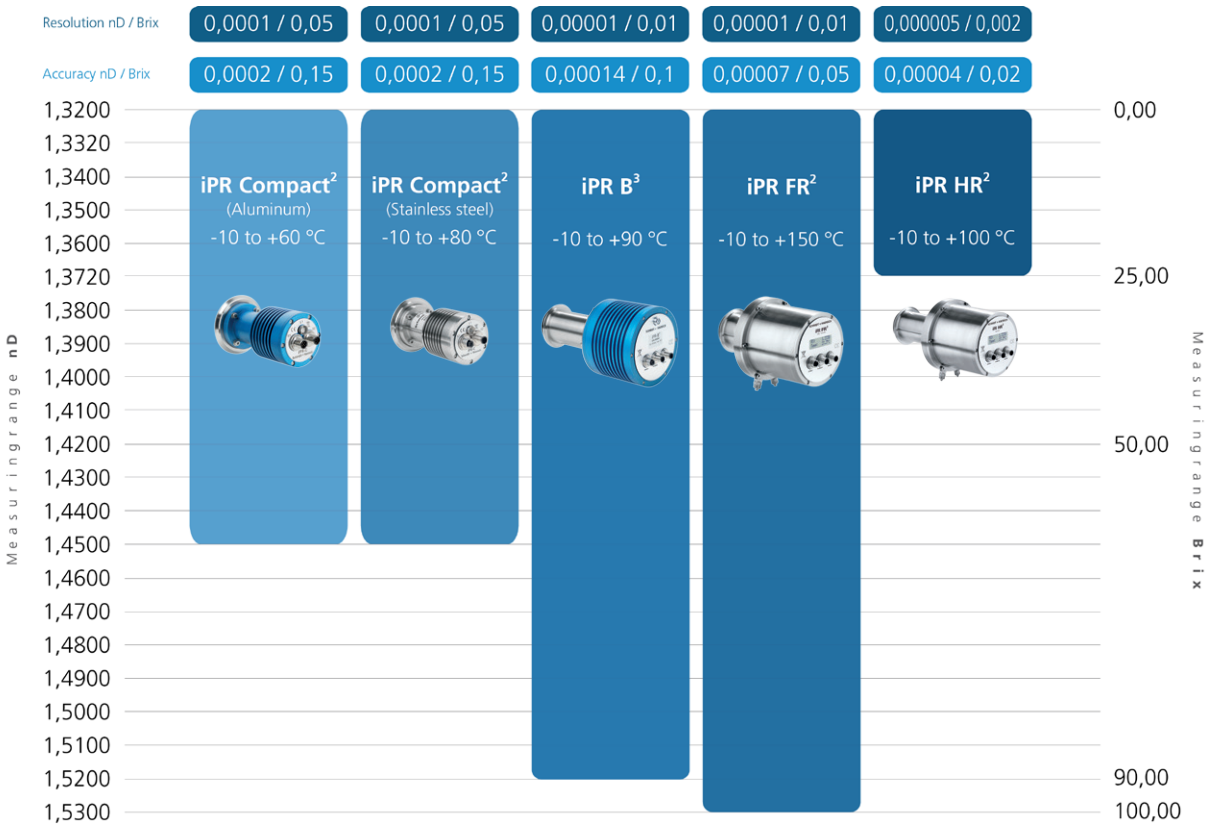

Application highlights Inline Refractometer

Food and beverage industry

- Quality control of chocolate, coffee, yoghurt, soya milk, honey and other food additives
- Dilution or evaporation process control in juice, jam, ketchup industries
- Dealcoholisation process of beer
- Payment system in the wine production (sugar content - Oechsle, Brix)
- Process monitoring in the pectin prod.
- Control of coffee and tea extraction process
- CIP monitoring, product recovery and interface detection

Chemical, petrochemical, chemical fibre

- Concentration measurement of solvents in the chemical fibre production. E.g. sulphuric acid, hydrochloric acid, phosphoric acid, caustic soda, alkali, DMF/DMSO/DMAC and other solvents
- Concentration of urea during the production of fuel additive
- Ammonia concentration in fertiliser production
- Interface detection in the oil phase seperation

Sugar, starch, sweeteners

- Brix measurement of: Cane sugar, beet sugar, starch, sugar, raw sugar refining, molasses
- Monitoring of the crystallisation process
- Impurity detection in condensate
- Concentration measurement of starch or sweetener

Biofuels and fermentation industry

- Monitoring of bio-extraction and fermentation process
- Concentration measurement of gelatine, glue, citric acid, lysine, lactic acid and other biological agents

Pharmaceutical industry

- Extraction, mixing, preparation, purity testing, crystallisation and dissolution monitoring
- Monitoring of chemical reactions as well as impurity detection
- Quality control of final products
- In accordance with Pharmacopoeia requirements

Pulp and paper industry

- Concentration measurement of modified starch for sizing in paper production
- Recovery process of black liquor and online testing of green liquor

Tobacco industry

- Monitoring of washing baths, flavours and fragrances control
- Concentration measurement during extraction of the active ingredients
- Concentration of coolants

Semiconductor, electronics industry

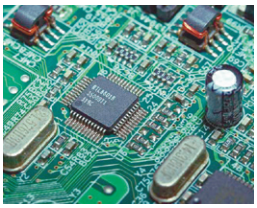

- Monitoring and purity control of solvents and various chemicals used for etching or cleaning in LCD display and chip manufacture. E.g. solvents, hydrogen peroxide H_2O_2 concentration and dosage

Mechanical processing, mining industry

- Concentration measurement and dosing of cutting oils and lubricants
- Lubricants blending control
- Concentration of coolants

Electricity, energy industry

- Detection of hydrogen peroxide concentration
- Concentration of ammonia denitration process control, etc.
- Impurity detection

Smart heads for smart solutions

iPR inline sensors can be used as a stand-alone solution with integrated display or connected to a PLC.

Using the integrated digital switches (up to 1 A), the iPRs can re-motely control pumps, valves as well as signals (e.g. visual, acoustic alarm). This feature allows a direct, real-time process control and simple automations (e.g. simple dosage systems) without an additional PLC.

The iPR measuring heads can be combined with various process sensors such as O_2, CO_2, pH, turbidity or conductivity to an intelligent sensing station.

To be resistant against most chemicals, wetted parts of our smart heads are made of stainless steel, complying with regulations in food, beverage and pharmaceutical industries.The synthetic YAG or sapphire prism is both mechanically stable and chemically inert to acids, sludge and solvents. Standard CIP procedures as well as the pipe pig use are applicable and controllable.

The iPR mesuring head can be installed in pipes, reactors, vessels, mixing tanks, kettles, boiling pans and evaporators, using different weld-in flanges. Preferred sealing material is Viton but special sealing (gasket) materials are available on customer request. (e.g. Kalrez)

To avoid the contact of highly concentrated acids or corrosive substances with stainless steel surface, special PTFE inline housings for the iPR are available. The preferred process connection from SCHMIDT+HAENSCH is the VariVent inline housing. The VariVent connection will handle pressure up to 10 bar and is hygienic while minimizing dead space.

The iPR is also available in an intrinsically safe version.
(ATEX Ex II 1G Ex ia IIC T4)

For processes, where the substances cause fouling on the prism surface, a cleaning device using water, steam or solvent is available. For processes where such additions are not allowed, a proprietary ultra-sonic cleaning system is available.

Technical data iPR-Series

SPECIFICATIONS	iPR Compact²
Measuring range	1.3200 - 1.4535 RI / 0 - 65 Brix
Resolution	0.0001 RI / 0.05 Brix
Precision	± 0.0002 RI / ± 0.15 Brix
Brix range	Temperature corrected
Process temperature	-10°C up to +60°C (alu) or up to +80°C (stain-
Wetted parts	YAG; stainless steel, optional: PTFE
Power supply	24 V DC
Interfaces	1 output 4 - 20 mA 1 digital output switch (up to 1 A) 1 serial output,RS232, alternativly RS485 or
Dimensions / Weight	150 x diam. 65 mm; approx. 1000 g
Highlights	Available as aluminium or stainless steel

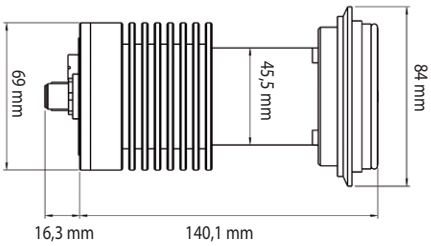

iPR COMMON	SPECIFICATION
User Scales	4 scales temperature compensated (e.g. Brix, Oechsle, H_2O_2)
Process pressure	Max. 1 MPa (145 psi, 10 bar)
Light source	LED 589 nm
Power supply	24 V DC
Interfaces	2 insulated 4 - 20 mA analog outputs 2 digital output switch (up to 1 A) 1 serial output RS232, alternativly RS485 or

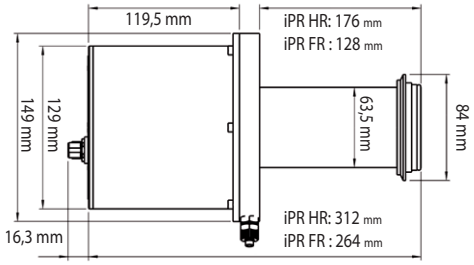

iPR FR
iPR HR

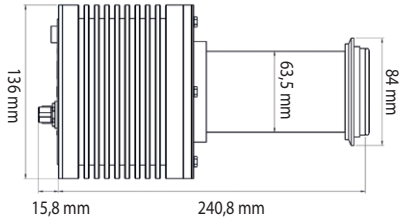

iPR Basic

SPECIFICATIONS	iPR Basic[3]
Measuring range	1.3200 - 1.5200 RI / 0 - 90 Brix
Resolution	0.00001 RI / 0.01 Brix
Precision	± 0.00014 RI / ± 0.1 Brix
Process temperature	-10°C up to +90°C
Wetted parts	Sapphire; stainless steel, optional: PTFE
Dimensions / Weight	240,8 x diam. 136 mm; approx. 3790 g
Highlights	Allrounder

SPECIFICATIONS	iPR FR[2] (Fullrange)
Measuring range	1.3200 - 1.5300 RI / 0 - 100 Brix
Resolution	0.00001 RI / 0.01 Brix
Precision	± 0.00007 RI / ± 0.05 Brix
Process temperature	-10°C up to +150°C
Wetted parts	YAG; stainless steel, optional: PTFE
Dimensions / Weight	264 x diam. 149 mm; approx. 5300 g
Highlights	Allrounder in stainles steel & for higher temperature

SPECIFICATIONS	iPR HR[2] (High Resolution)
Measuring range	1.3200 - 1.3720 RI / 0 - 25 Brix
Resolution	0.000005 RI / 0.002 Brix
Precision	± 0.00004 RI / ± 0.02 Brix
Process temperature	-10°C up to +100°C (with water cooling in-
Wetted parts	YAG; stainless steel, optional: PTFE
Dimensions / Weight	312 x diam. 149 mm; approx. 5500 g
Highlights	Model with highest resolution User programmable 2 line illuminated dis-

Mounting accessories for process integration

Inline housing from SCHMIDT+HAENSCH are perfectly suitable for hygienic installations of processes in vessels or pipes.
The VariVent joint system allows easy installation of iPR instruments through a plug-in and clamping method. The inline housing can be used with process pressure up to 10 bar.
Some processes may require cleaning of the sensor face.
SCHMIDT+HAENSCH offers an optional cleaning nozzle system or an ultrasonic cleaning system.
For pipe size not shown in the table other combinations of bypass lines or reducers can be incorporated into the design.

Inline housing VariVent / welded

For the installation of an iPR in pipes by welding flange

Metric
Outside diameter in accordance to DIN 11850, series II, DIN 11866, series A

Nominal wide d	A	B	C	D	Order No.
DN 40	90	68	36	41	08211
DN 50	90	68	42	53	07223
DN 65	125	68	50	70	08628
DN 80	125	68	57,5	85	08629
DN 100	125	68	67	104	08631
DN 125	125	68	79,5	129	08632

Inch
Outside diameter in accordance to DIN ASME-BPE-a-2004, DIN 11866, series C

Nominal wide d	A	B	C	D	Order No.
1 1/2"	90	68	34,5	38,1	02796
2"	90	68	40,75	50,8	02634
2 1/2"	125	68	47	63,5	10993
3"	125	68	53,5	76,2	01113
4"	125	68	65,75	101,6	10995

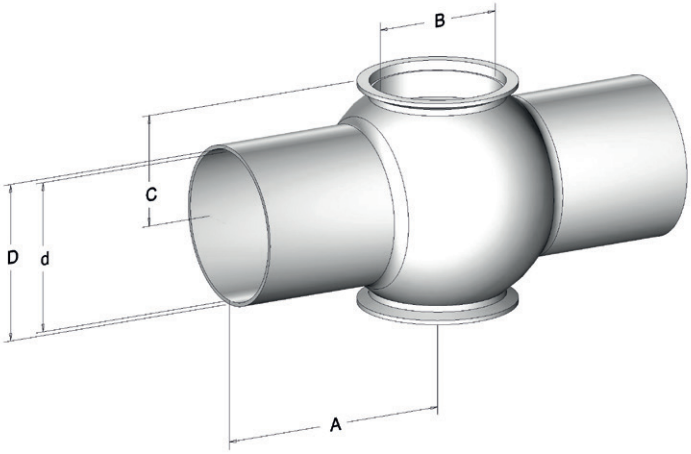

VariVent / welded

For installation of an iPR in pipes with TriClamp connection

VariVent housing connection T Order No. 07516

Inline housing for small volumes

For the installation of an iPR in small volumes, with hose and pipe connections

Case type	Order No.
BE stainless steel housing	07284
BE PTFE housing	09662
BV1 VariVent stainless steel housing, 1" pipec	01495
BV2 VariVent stainless steel housing 1/2" pipec	10328

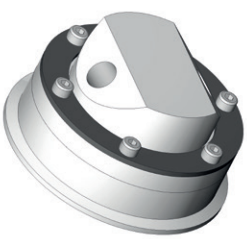

Inline housing VariVent / TriClamps ends

For installation of an iPR in pipes with TriClamp connection
Metric
Outside diameter in accordance to DIN 11850, series II, DIN 11866, series A

Nominal wide d	B	C	D	Order No.
DN 40	68	36	41	11004
DN 50	68	42	53	11005
DN 65	68	50	70	11006
DN 80	68	57,5	85	11007
DN 100	68	67	104	11008
DN 125	68	79,5	129	11009

Inch
Outside diameter in accordance to ASME-BPE-a-2004, DIN 11866, series C

Nominal wide d	B	C	D	Order No.
1 1/2	68	34,5	38,1	11055
2	68	40,75	50,8	11056
2 1/2	68	47	63,5	11057
3	68	53,5	76,2	11058
4	68	65,75	101,6	11059

Inline housing APV / welded

For the installation of an iPR in pipes by welding flange
Metric
Outside diameter in accordance to DIN 11850, series II, DIN 11866, series A

Nominal wide d	A	B	C	D	Order No.
DN 25	68	26	29	25,5	02735
DN 40	67	38	41	31,5	02490
DN 50	72	50	53	37,5	01667
DN 65	85	66	70	45,5	11060
DN 80	98	81	85	53,0	02667
DN 100	111	100	104	62,5	11009
DN 125	130	125	129	75,0	11014
DN 150	150	150	154	87,5	10996

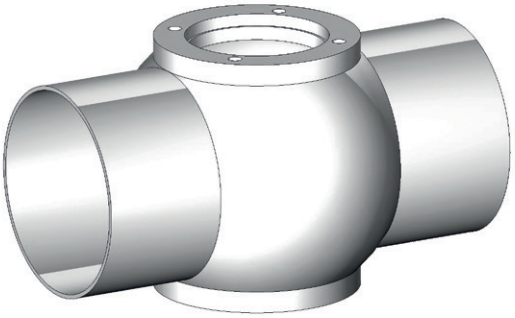

Inch
Outside diameter in accordance to ASME-BPE-a-2004, DIN 11866, series C

Nominal wide d	A	B	C	D	Order No.
1	68	22,9	25,4	24,0	03324
1 1/2"	67	35,1	38,1	30,0	11080
2"	72	47,8	50,8	36,4	11081
2 1/2"	85	60,3	63,5	42,5	11082
3"	90	72,9	76,1	48,5	01068
4"	111	97,6	101,6	61,3	11084

Prism cleaning options

High pressure fluid or steam cleaning system	Order No. 07140
Ultra sonic cleaning system	Order No. 08459

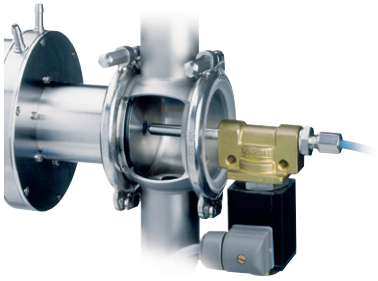

Fluid/steam cleaning system

Ultra-sonic cleaning system

90° pipe installation with high pressure fluid cleaning system

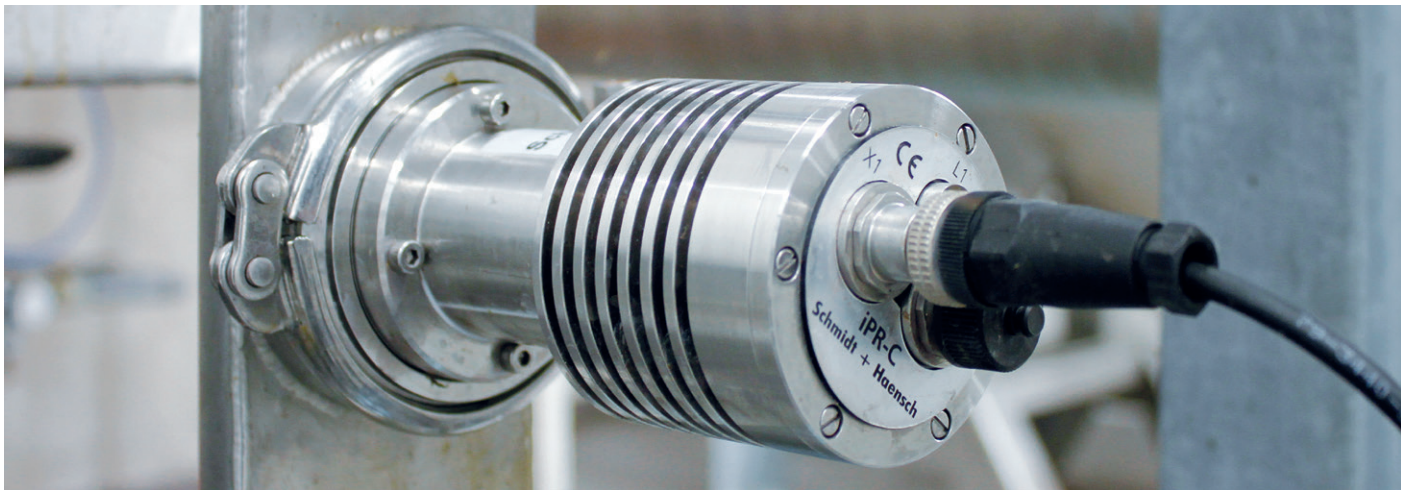

Straight pipe installation

Integration in automation system

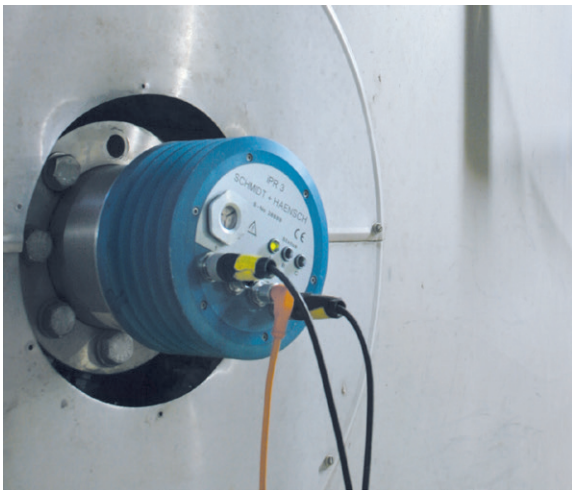

Vessel mounting

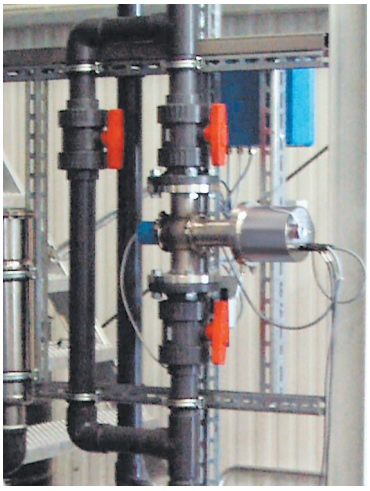

Straight pipe installation with ultrasonic cleaning system

SCHMIDT HAENSCH
innovators by tradition since 1864

Schmidt + Haensch GmbH & Co.
Waldstraße 80-81, 13403 Berlin, Germany
Phone: + 49 (0 30) 417072-0, Fax: + 49 (0 30) 417072-99

ISO 9001:2008

© Schmidt + Haensch reserved all rights over texts and images
Subject to modification without notice 05/17